Jan.1.2026 Copyright 2026 HIROSE ELECTRIC CO., LTD. All Rights Reserved.
In case of consideration for using Automotive equipment / device which demand high reliability, kindly contact our sales window correspondents.

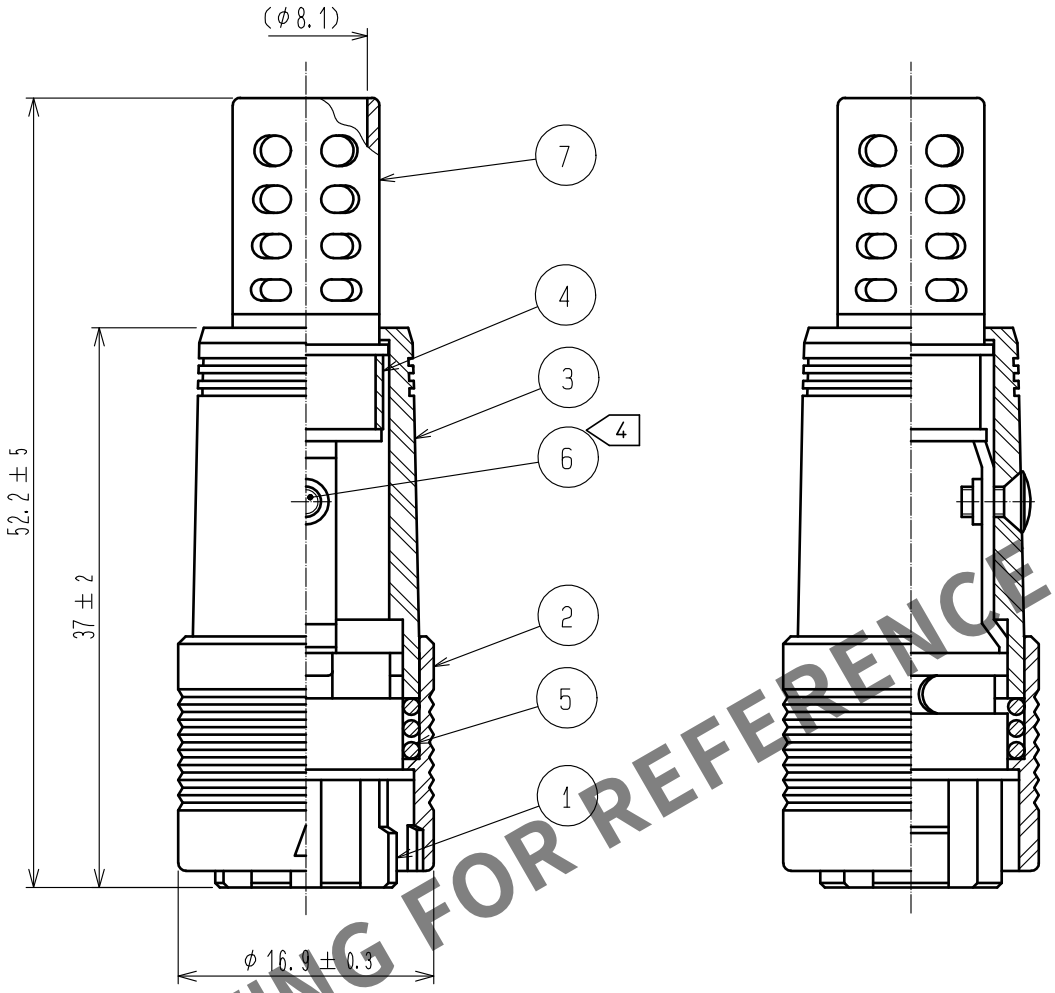

HRS DRAWING FOR REFERENCE

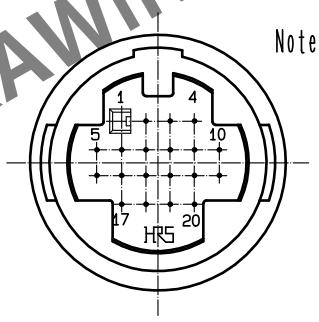

Notes △1 1 Applicable crimp contact:
RP19-SC-222/CL113-0266-2
(Applicable cable size : AWG#24 to #28.
Cable jacket outer diameter shall be φ1.15mm or less.)

2 Applicable cable crimping tool :
RP13A-TC-02/CL150-0071-3

3 Extraction tool :RP6-SC-TP/CL150-0039-0

△1 4 The tighteninig torque of Ref No. ⑥:
0.15 to 0.2 N・m.
To prevent loosening Ref No.⑥,
use LOCTITE 243, HENKEL JAPAN or equivalent.

5 Shall be disassembled when delivered.

△1 6 The cable pull and twisting strength and other characteristics may differ, depending on the cable structure, please confirm before the use.

NO.	MATERIAL	FINISH . REMARKS	NO.	MATERIAL	FINISH . REMARKS
4	Brass				
3	Polycarbonate	(BLACK) UL94V-0	7	Polyvinylchloride	(BLACK)
2	Polycarbonate	(BLACK) UL94V-0	6	Brass	Black chromete treatment (Trivalent chromium) JIS B 1111 M2X0.4X4
1	Polycarbonate	(BLACK) UL94V-0	5	Steel	Nickel plating

UNITS	SCALE		COUNT	DESCRIPTION OF REVISIONS	DESIGNED	CHECKED	DATE
mm	2 : 1	△1	4	DIS-C-00009810	TY. SUZUKI	HY. KOBAYASHI	20220215

HIROSE ELECTRIC CO., LTD.

APPROVED	: MO. SATOH	20081203
CHECKED	: HY. KOBAYASHI	20081203
DESIGNED	: TH. KAMEYA	20081203
DRAWN	: TH. KAMEYA	20081203

DRAWING NO. EDC-040899-71-71
PART NO. RP13A-12PS-20SC(71)
CODE NO. CL0113-1022-3-71
△1 1/1

FORM HC0011-5-51